MARKER CODE				

STUDENT ENROLMENT NUMBER (SEN)									

TONGA FORM SIX CERTIFICATE

2023

DESIGN TECHNOLOGY

QUESTION AND ANSWER BOOKLET

Time allowed: 2 ½ Hours

INSTRUCTIONS:

1. Write your **Student Enrolment Number (SEN)** on the top right-hand corner of this page.
2. This paper consists of **FIVE MAJOR AREAS**. Each **AREA** is out of 70 weighted scores.
3. Answer **ONLY ONE MAJOR AREA. DO NOT** answer ALL THE MAJOR AREAS.

MAJOR AREAS		TOPICS	TOTAL SKILL LEVEL
	Please √ choice	**OPTIONAL QUESTIONS** Choose **ONE** (Major 1 – Major 5)	
1		**WOOD TECHNOLOGY**	**70**
2		**METAL TECHNOLOGY**	
3		**FOOD TECHNOLOGY**	
4		**TEXTILE AND GARMENT CONSTRUCTION**	
5		**TECHNICAL GRAPHICS**	
		TOTAL	**70**

4. Answer ALL QUESTIONS in your chosen **Major Area**. Write your answers in the spaces provided in this booklet.
5. Use a **BLUE** or **BLACK** ball point pen only for writing. Use a pencil for drawing if required.
6. If you need more space for answers, ask the supervisor for extra paper. Write your **Student Enrolment Number (SEN)** on each additional sheet, number the questions clearly and insert them in the appropriate places in this booklet.
7. Check that this booklet contain pages 2-75 in the correct order and that pages 74-75 have been

YOU MUST HAND IN THIS BOOKLET TO THE SUPERVISOR BEFORE YOU LEAVE THE EXAMINATION ROOM.

MAJOR AREA 1: WOOD TECHNOLOGY

SECTION A: MATERIALS

MULTIPLE CHOICE:

Circle the letter of the **BEST** answer.

1. Which of the following is true about softwood?
   A. More expensive than hardwood.
   B. Grows slower than hardwood.
   C. Lighter in weight than hardwood.
   D. Higher density than hardwood.

Skill level 1	
1	
0	
NR	

2. Which of the following is not a hardwood?
   A. Fir
   B. Maple
   C. Walnut
   D. Cherry

Skill level 1	
1	
0	
NR	

3. The top grade of hardwood lumber is labeled by _____ lumber.
   A. Factory
   B. Yard
   C. First and Second (FAS)
   D. Common yard

Skill level 1	
1	
0	
NR	

4. The best type of hardwood for a student to produce a wooden spoon is:
   A. Cherry and walnut.
   B. Maple and olive.
   C. Ash and pine.
   D. Oak and teak.

Skill level 1	
1	
0	
NR	

5. Which type of particle board is more durable, fireproof, and termite resistant?
   A. Single-layer particle board.
   B. Three-layer particle board.
   C. Cement-bonded particle board.
   D. Melamine particle board.

Skill level 1	
1	
0	
NR	

6. Aircraft plywood are used in aircrafts because of the following features given below except:
   A. Extreme strength
   B. Lightness
   C. Ease of working
   D. Inflexible

Skill level 1	
1	
0	
NR	

SHORT AND LONG ANSWERS:

Read the questions carefully and answer them correctly.

1. Describe **TWO (2)** of the unique features of marine plywood.

_____

_____

_____

_____

_____

_____

Skill level 2	
2	
1	
0	
NR	

2. Describe **TWO (2)** of the characteristics of hardwood.

_____

_____

_____

_____

_____

_____

Skill level 2	
2	
1	
0	
NR	

3. List the **FOUR (4)** commonly used timber conversion methods.

i. _____

ii. _____

iii. _____

iv. _____

Skill level 2	
2	
1	
0	
NR	

4. Explain the general characteristics of softwood.

_____

_____

_____

_____

_____

_____

_____

_____

_____

_____

_____

_____

Skill level 3	
3	
2	
1	
0	
NR	

5. Explain the advantages of air seasoning of timber.

Skill level 3	
3	
2	
1	
0	
NR	

6. Explain **ONE (1)** of the defects that occur in the seasoning process.

Skill level 3	
3	
2	
1	
0	
NR	

7. Discuss the disadvantages of kiln seasoning.

Skill level 4	
4	
3	
2	
1	
0	
NR	

SECTION B: TOOLS

MULTIPLE CHOICE:

Circle the letter of the **BEST** answer.

1. What is the correct name for the hand tool given below?

A. Sliding bevel
B. Straight edge
C. Jack plane
D. Smoothing plane

Skill level 1	
1	
0	
NR	

2. Which of the following is a tool used for holding and supporting?

A.

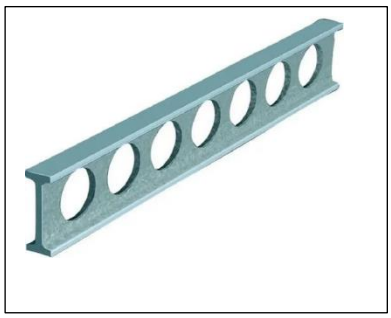

C.

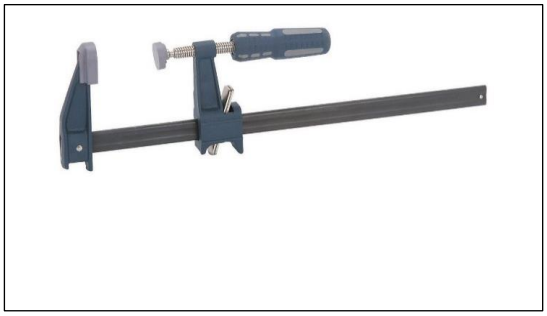

B.

D.

Skill level 1	
1	
0	
NR	

3. Hand tools are tools that:
   A. operates with an electric motor
   B. are manually used by hand
   C. are used for laying out
   D. operates with machines

Skill level 1	
1	
0	
NR	

4. Which of the given tools is a power tool:

A.

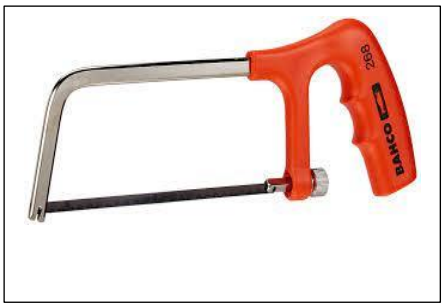

C.

B.

D.

Skill level 1	
1	
0	
NR	

5. What is the name of the part labelled **A** of the hand tool given below:

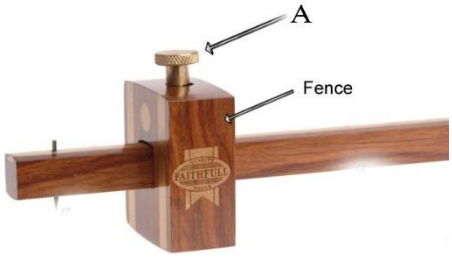

A. Stem
B. Stock
C. Blade
D. Thumb screw

Skill level 1	
1	
0	
NR	

6. What is the main purpose of applying sanding sealer on to wood surface?
A. Sealing the wood pores
B. Apply as a final coat
C. Replace the clear varnish
D. Apply after varnishing

Skill level 1	
1	
0	
NR	

SHORT AND LONG ANSWERS:

Read the questions carefully and answer them correctly.

1. Mortice and tenon joint are very popular for construction of chairs and tables. List **FOUR (4)** hand tools needed to construct the joint.

i. _____

ii. _____

iii. _____

iv. _____

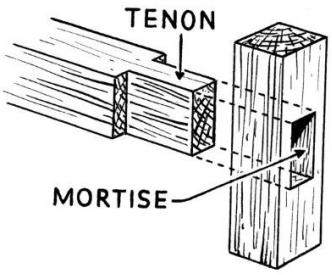

Skill level 2	
2	
1	
0	
NR	

2. List **FOUR (4)** common uses of mitre joint in construction.

i. _____

ii. _____

iii. _____

iv. _____

Skill level 2	
2	
1	
0	
NR	

3. Explain **THREE (3)** benefits of proper tools storage.

i. _____

_____

_____

ii. _____

_____

_____

iii. _____

_____

_____

Skill level 3	
3	
2	
1	
0	
NR	

4. Clearly explain why dovetail joints are the best for drawer joint.

_____
_____
_____
_____
_____
_____
_____
_____
_____
_____

Skill level 3	
3	
2	
1	
0	
NR	

5. Explain the first **THREE** (3) steps in preparation of timber.

i. Face side:

_____
_____
_____
_____
_____

ii. Face edge:

_____
_____
_____
_____
_____

iii. Width:

_____
_____
_____
_____
_____

Skill level 3	
3	
2	
1	
0	
NR	

6. Discuss why it is important in construction to understand tools.

Skill level 4	
4	
3	
2	
1	
0	
NR	

7. Discuss the advantages and disadvantages of power cutting tools compared to hand tools.

Skill level 4	
4	
3	
2	
1	
0	
NR	

SECTION C: DESIGNING

MULTIPLE CHOICE:

Circle the letter of the **BEST** answer.

1. Which of the following is a wood fastener?
   A. Saw
   B. Paint
   C. Sealer
   D. Nails

Skill level 1	
1	
0	
NR	

2. What sandpaper grit is used after varnishing?
   A. 320
   B. 220
   C. 150
   D. 100

Skill level 1	
1	
0	
NR	

3. When doing the investigation in designing your project, you are to:
   A. Measure and cut the pieces to size
   B. Draw the final plan
   C. Prepare questionnaire
   D. Test and report

Skill level 1	
1	
0	
NR	

4. Developing the design brief is done during the process of:
   A. Investigating
   B. Devising
   C. Making
   D. Evaluating

Skill level 1	
1	
0	
NR	

SHORT AND LONG ANSWERS:

Read the questions carefully and answer them correctly.

1. Describe the importance of the evaluation stage of design brief.

Skill level 2	
2	
1	
0	
NR	

2. Explain how you carried out your investigation for your independent project for this year.

Skill level 3	
3	
2	
1	
0	
NR	

3. Explain how you came up with your best solution during the designing stage of your project.

Skill level 3	
3	
2	
1	
0	
NR	

4. Explain how you managed to overcome any problems that occurred during the making stage of your project.

Skill level 3	
3	
2	
1	
0	
NR	

5. Explain the outcome of your project that you used in your Internal Assessment (IA) this year. Think about the outcome, did it meet the design brief? How well did it work? Could it be improved?

Skill level 3	
3	
2	
1	
0	
NR	

MAJOR AREA 2: **METAL TECHNOLOGY**

SECTION A:

MULTIPLE CHOICE:

Circle the letter of the **BEST** answer.

1. Which of the following forging tools is used for holding hot metal?
   A. tongs.
   B. hammer.
   C. anvil
   D. pot

Skill level 1	
1	
0	
NR	

2. Which of the following is not a non-ferrous metal?
   A. Lead
   B. Copper
   C. Aluminum
   D. Cast iron

Skill level 1	
1	
0	
NR	

3. The two most common causes of accidents in the workshop are:
   A. Unsafe action and safe condition
   B. Unsafe action and unsafe condition
   C. Safe action and safe condition
   D. Safe action and unsafe condition

Skill level 1	
1	
0	
NR	

4. Which of the following is one of the properties of metals?
   A. Low melting point
   B. Bad conductors of heat
   C. Ductile
   D. Low density

Skill level 1	
1	
0	
NR	

5. Which of the following is not true about ferrous metals?
   A. They are magnetic
   B. They are prone to rust
   C. They are lighter in weight
   D. They are easily recyclable

Skill level 1	
1	
0	
NR	

6. Which part of the anvil is used for hammering curved pieces of metal?
   A. Face
   B. Horn
   C. Step
   D. Hardie Hole

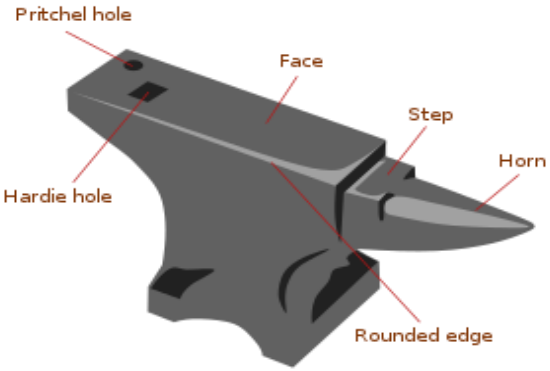

Skill level 1	
1	
0	
NR	

7. The producing stage is where the student:
   A. make the item.
   B. investigate and research about the item.
   C. evaluate the outcome of the item.
   D. think about the item to make.

Skill level 1	
1	
0	
NR	

8. When you enter the workshop room, you must not:
   A. run to your working area.
   B. walk to your working area.
   C. keep alert at all times.
   D. wear safety googles.

Skill level 1	
1	
0	
NR	

9. A document that defines the core details of your upcoming design project is known as a design _____.
   A. outline
   B. brief
   C. solution
   D. ideas

Skill level 1	
1	
0	
NR	

10. Which of the following is not correct about the characteristics of metals?
   A. Do conduct heat
   B. They are malleable
   C. They are ductile
   D. Do not conduct electricity

Skill level 1	
1	
0	
NR	

SHORT AND LONG ANSWERS:

Read the questions carefully and answer them correctly.

1. Name **TWO (2)** of the main forging tools in the Black Smith process that you need to start with.

   i. _____

   ii. _____

Skill level 1	
1	
0	
NR	

2. What do you turn on first when lighting an oxy acetylene torch?

   _____

   _____

   _____

Skill level 1	
1	
0	
NR	

3. What is the difference between drawing down and upsetting a piece of metal?

   _____

   _____

   _____

Skill level 1	
1	
0	
NR	

4. Describe **TWO (2)** safety rules when operating a machine.

   i. _____

   _____

   _____

   _____

   ii. _____

   _____

   _____

Skill level 2	
2	
1	
0	
NR	

5. Describe **TWO (2)** reasons why it is important to store materials correctly in the workshop.

   i. _____

   _____

   _____

   _____

   _____

   ii. _____

   _____

   _____

   _____

   _____

Skill level 2	
2	
1	
0	
NR	

6. Name **TWO (2)** of the properties of metals that makes it suitable for a cooking pot.

i. _____

_____

ii. _____

_____

Skill level 2	
2	
1	
0	
NR	

7. Explain the uses of the tools given in the table below.

	TOOLS	USES
i.	Double ended Spanner	
ii.	Band saw	
iii.	Pedestal drill	

Skill level 3	
3	
2	
1	
0	
NR	

Skill level 3	
3	
2	
1	
0	
NR	

Skill level 3	
3	
2	
1	
0	
NR	

8. Clearly explain how do you proceed to safely conduct a welding using an arc welding.

_____
_____
_____
_____
_____
_____
_____
_____
_____
_____

Skill level 3	
3	
2	
1	
0	
NR	

9. What are **THREE (3)** rules should be followed when oxygen is in use.

i. _____
_____
_____
_____

ii. _____
_____
_____
_____

iii. _____
_____
_____
_____

Skill level 3	
3	
2	
1	
0	
NR	

10. Explain the purposes of applying metal finishes on to metal.

Skill level 4	
4	
3	
2	
1	
0	
NR	

11. Explain the **FOUR (4)** types of manufacturing process of metal.

i.

ii.

iii.

iv.

Skill level 4	
4	
3	
2	
1	
0	
NR	

12. Briefly explain why do we classify metals.

Skill level 4	
4	
3	
2	
1	
0	
NR	

SECTION B: DESIGNING

SHORT AND LONG ANSWERS:

Read the questions carefully and answer them correctly.

1. Define the following terms.

   i. Design brief:

   _____

   _____

   _____

Skill level 1	
1	
0	
NR	

   ii. Investigating:

   _____

   _____

   _____

Skill level 1	
1	
0	
NR	

2. Complete the table by naming the missing design stages.

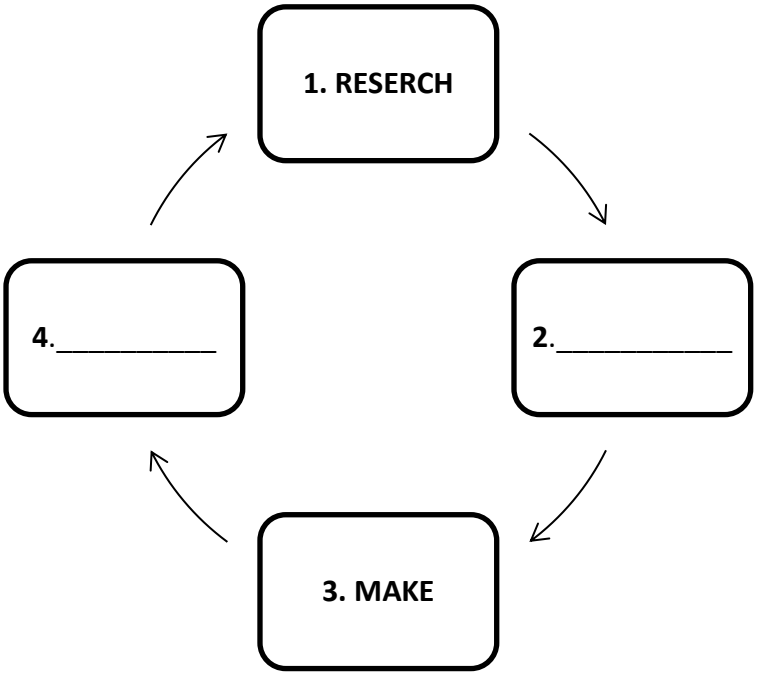

Skill level 1	
1	
0	
NR	

3. Describe the importance of the evaluation stage of the design brief.

_____

_____

_____

_____

_____

Skill level 2	
2	
1	
0	
NR	

4. List **TWO (2)** of the methods you used for the investigation of your independent project this year.

Skill level 2	
2	
1	
0	
NR	

5. What does "two ways process" mean in designing process?

Skill level 2	
2	
1	
0	
NR	

6. Explain how you carried out your investigation for your independent project this year.

Skill level 3	
3	
2	
1	
0	
NR	

7. Explain how you came up with your best solution during the designing of your project.

Skill level 3	
3	
2	
1	
0	
NR	

8. Explain how you managed to overcome any problems that occurred during the making stage of your project.

Skill level 3	
3	
2	
1	
0	
NR	

9. Explain the outcome of your project that you used in your Internal Assessment (IA) this year. Think about the outcome, did it meet the design brief? How well did it work? Could it be improved?

Skill level 3	
3	
2	
1	
0	
NR	

10. Explain the importance of maintaining good care of tools and equipment while making your project this year.

Skill level 3	
3	
2	
1	
0	
NR	

MAJOR AREA 3: FOOD TECHNOLOGY

SECTION A: DESIGNING

MULTIPLE CHOICE:

Circle the letter of the **BEST** answer.

1. The use of notes to explain items that may not be obvious at first sight is called _____.
   A. Innovation
   B. Annotation
   C. Formulating
   D. Disassembly

Skill level 1	
1	
0	
NR	

2. Identify the best description for Procedural issues.
   A. Process of how to do.
   B. Knowledge of how to use.
   C. Skills of how to implement.
   D. Technique of how to process.

Skill level 1	
1	
0	
NR	

3. Product modification in any Project Making is a good example of _____.
   A. Problem Solving
   B. Project limitation
   C. Client Expectations
   D. Task implementation

Skill level 1	
1	
0	
NR	

4. Before a designer collects relevant ideas for a solution, he/she needs to
   A. build and repair task.
   B. implement a decision.
   C. note the expectations.
   D. develop and refine ideas.

Skill level 1	
1	
0	
NR	

5. The line that gives an impression of width, serenity, and relaxation in designing is known as _____.
   A. Curved
   B. Zig-zag
   C. Vertical
   D. Horizontal

Skill level 1	
1	
0	
NR	

COMPLETION:

Complete the spaces below by using the correct concepts provided in the box. Use a concept only once.

Formulation	**Texture**	**Prototypes**	**Constraints**
Renovation	**Aesthetics**	**Management**	

1. The appearance of an item or product is known as _____.

2. _____ are things which may limit the making of a project.

3. Creation of a design brief from research and investigations is called

   _____.

4. To repair and renew any artifacts as good as new is called _____.

5. _____ refers to the surface quality of an object.

Skill level 1	1.	2.	3.	4.	5.
1					
0					
NR					

SHORT AND LONG ANSWERS:

Read the questions carefully and answer them correctly.

1. You have achieved the best outcome of your major project implementation.
   Describe the successful tasks that led you to achievement.

Skill level 2	
2	
1	
0	
NR	

2. Explain the role of **Emphasis** in the creativity of any designing purposes.

Skill level 3	
3	
2	
1	
0	
NR	

3. *"All designers in the world are not perfect at all. Usually, they use the strategy of re-design for quality designing outcomes.*"
   Explain the importance of consulting the previous stage of the design process.

Skill level 3	
3	
2	
1	
0	
NR	

Study either **Picture A** or **Picture B** and choose **ONE (1)** picture to answer question 4.

PICTURE A

Source: Polynesian Culture

PICTURE B

Source: Island Birthday Cake

Chosen Picture: _____ (A or **B)**

4. Evaluate your chosen picture in terms of quality workmanship including skills and techniques. Use the design elements and principles.

Skill level 4	
4	
3	
2	
1	
0	
NR	

SECTION B: FOOD TECHNOLOGY

MULTIPLE CHOICE:

Circle the letter of the BEST answer.

1. Identify the correct order of a menu when dining out.
   A. Coffee/Tea – Hot Entrées – Starter – Cold Entrées – Main Courses – Desserts.
   B. Cold Entrées – Hot Entrées – Starter – Main Courses – Desserts – Coffee/Tea.
   C. Starter – Hot Entrées – Main Courses – Coffee/Tea – Cold Entrées – Desserts.
   D. Starter – Cold Entrées – Hot Entrées – Main Courses – Desserts – Coffee/Tea.

Skill level 1	
1	
0	
NR	

2. An inexperienced cook asks you for help as he finds it difficult to have all the meal ready to serve at the same time. State the advice you would give him.
   A. Use the microwave as much as possible.
   B. Make cold dishes in advance and refrigerate.
   C. Plan use of time, working back from serving time.
   D. Read all recipes carefully before beginning to cook.

Skill level 1	
1	
0	
NR	

3. The first fluid produced in the mother's breast is colostrum which is extra rich in
   A. Minerals and Protein.
   B. Vitamins and Protein.
   C. Minerals and Vitamins.
   D. Carbohydrates and Protein.

Skill level 1	
1	
0	
NR	

4. To spoon hot fat over food whilst cooking to keep the food moist is called _____.
   A. Baste.
   B. Glaze.
   C. Sauté.
   D. Blanch.

Skill level 1	
1	
0	
NR	

5. The incubation period of the bacteria 'Bacillus cereus' is _____.
   A. 1 – 5 hours
   B. 6 – 10 hours
   C. 11 – 15 hours
   D. 16 – 20 hours

Skill level 1	
1	
0	
NR	

NUTRIENTS AND HEALTH:

SHORT AND LONG ANSWERS:

Read the questions carefully and answer them correctly.

1. List the main food sources required by the 'Team TALA' players for their good health and nutritional requirements in **Figure 1**.

Figure 1

TEAM TALA

Source : Matangitonga

Skill level 2	
2	
1	
0	
NR	

2. Describe why there is a coating of mucous around food and in the digestive track.

Skill level 2	
2	
1	
0	
NR	

3. *'Protein is composed of amino acids, which are the building blocks of proteins.'*
With the help of the diagram in **Figure 2**, explain **"Essential Amino Acids"**.

Figure 2

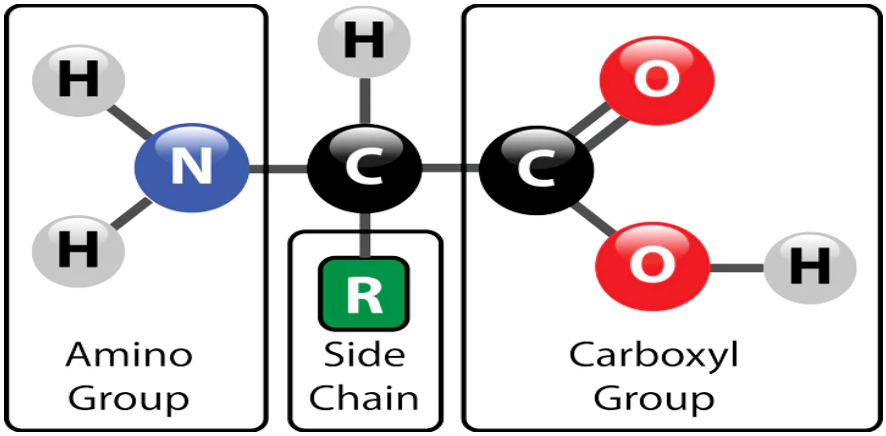

Source: Skincraft.com

Skill level 3	
3	
2	
1	
0	
NR	

4. Explain the functions of Essential Fatty Acids in our body.

Figure 3

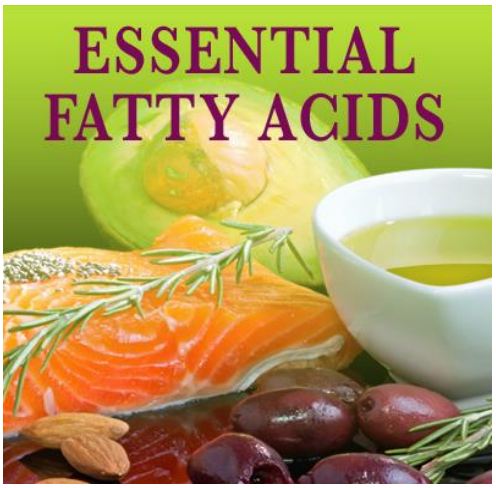

Source: drbarrytaylor.com

Skill level 3	
3	
2	
1	
0	
NR	

5. Use the extract below in **Figure 4** to explain the role of water in the body with recommended daily intakes.

Figure 4

Water is essential to the human body. We will die from lack of water before we die from lack of food. 'Enjoy water' was included in the first dietary guidelines and recommended to take enough of the fluid requirements as plain water.

Skill level 3	
3	
2	
1	
0	
NR	

Read the information given below and answer question 6.

Food choices for the elderly

Older people are usually less active than people from other age groups. They may eat less food than when they were younger, because their appetite becomes smaller with age. Although their need for energy is less, they still need to eat a variety of foods and must include relevant nutrients in their diet. Elderly people need to make sure the food they eat is nutrient-dense and easy to digest.

6. Discuss the reasons why it is sometimes difficult for elderly people to eat a healthy and adequate diet.

Skill level 4	
4	
3	
2	
1	
0	
NR	

FOOD SAFETY AND FOOD QUALITY:

SHORT AND LONG ANSWERS:

Read the questions carefully and answer them correctly.

1. Define **Kitchen Waste**.

Skill level 1	
1	
0	
NR	

_____

_____

_____

2. Describe the purpose of **silica gel packets** in *Dried Food*.

Figure 5

Source: blockspot.com

_____

_____

_____

_____

_____

_____

Skill level 2	
2	
1	
0	
NR	

3. Describe why some local people preserved their foods by **Smoking** as shown in **Figure 6** below.

Figure 6

SMOKING

Source: smoking method of preservations

Skill level 2	
2	
1	
0	
NR	

4. Explain how the following factors influence **Food Spoilage**.

i. **Microorganism** and **Enzymes**.

Skill level 3	
3	
2	
1	
0	
NR	

ii. **Insects** and **Physical damage**.

Skill level 3	
3	
2	
1	
0	
NR	

5. Carefully study **Figure 7 and 8**. Explain how bacteria multiplies when prolonged food is reheated, restored, and reheated again.

Figure 7

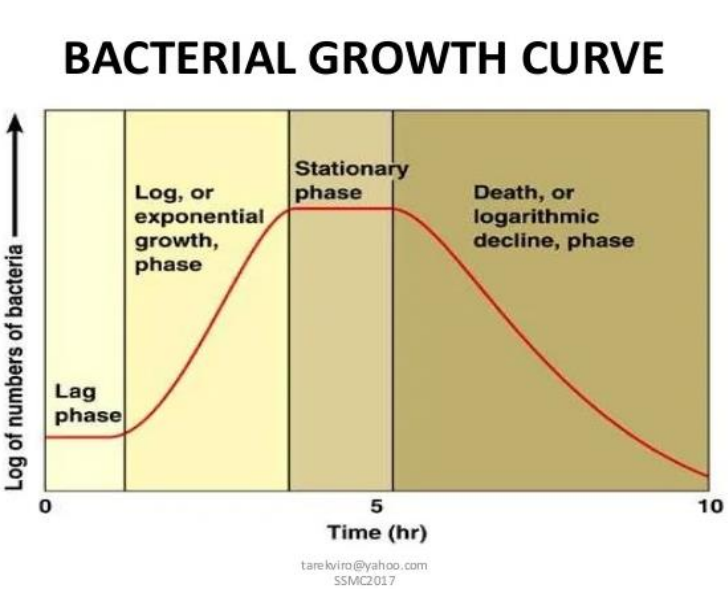

Figure 8

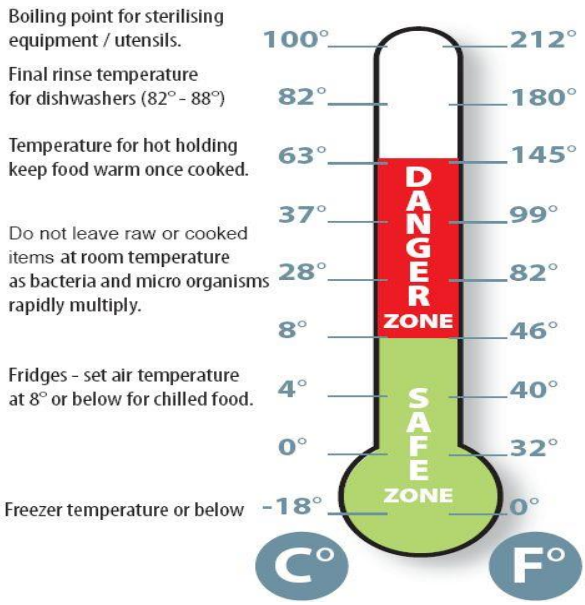

Source: Physiology of bacteria growth

Skill level 3	
3	
2	
1	
0	
NR	

FOOD PLANNING AND PRODUCT DEVELOPMENT:

SHORT AND LONG ANSWERS:

Read the questions carefully and answer them correctly.

1. A menu can take several forms. Describe **Menu Forms**.

Skill level 2	
2	
1	
0	
NR	

2. In Meal planning, balance in the Menu is important. Explain the importance of **"Avoiding Repetition"** as one of the considerations when balancing a menu.

Skill level 3	
3	
2	
1	
0	
NR	

3. Explain the proper process of **Thawing** meat as recommended in the Cooking Development.

Figure 9

Skill level 3	
3	
2	
1	
0	
NR	

4. **"Healthiness" of Food and Beverage net imports** is one of the '*Contemporary food issues'* in the Pacific today.
Discuss how significant is it with the result that is shown in **Figure 10**.

Figure 10

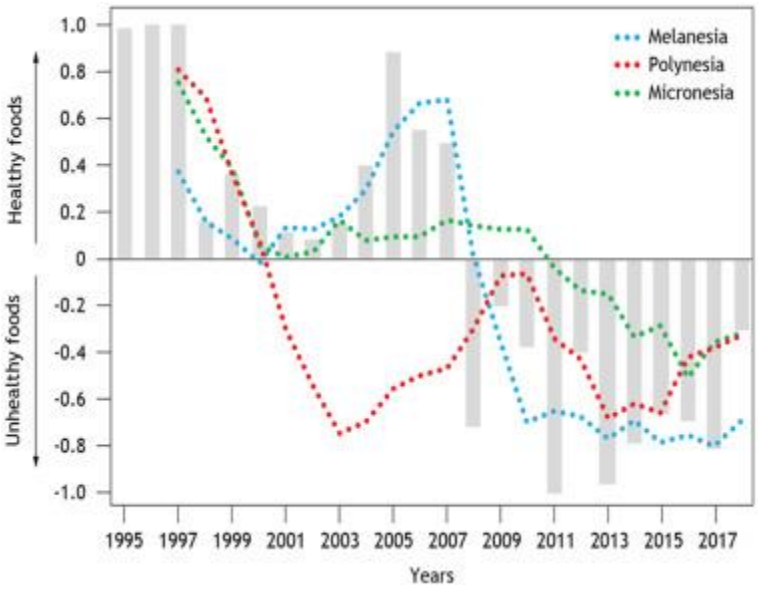

Source: ***www.sciencedirect.com***

Skill level 4	
4	
3	
2	
1	
0	
NR	

MAJOR AREA 4: TEXTILE AND GARMENT CONSTRUCTION

SECTION A: DESIGNING

MULTIPLE CHOICE:

Circle the letter of the **BEST** answer.

1. The use of notes to explain items that may not be obvious at first sight is called _____.
   A. Innovation
   B. Annotation
   C. Formulating
   D. Disassembly

Skill level 1	
1	
0	
NR	

2. Identify the best description for Procedural issues.
   A. Process of how to do.
   B. Knowledge of how to use.
   C. Skills of how to implement.
   D. Technique of how to process.

Skill level 1	
1	
0	
NR	

3. Product modification in any Project Making is a good example of _____.
   A. Problem Solving
   B. Project limitation
   C. Client Expectations
   D. Task implementation

Skill level 1	
1	
0	
NR	

4. Before a designer collects relevant ideas for a solution, he/she needs to
   A. build and repair task.
   B. implement a decision.
   C. note the expectations.
   D. develop and refine ideas.

Skill level 1	
1	
0	
NR	

5. The Line that gives an impression of width, serenity, and relaxation in designing is known as _____.
   A. Curved
   B. Zig-zag
   C. Vertical
   D. Horizontal

Skill level 1	
1	
0	
NR	

COMPLETION:

Complete the spaces below by using the correct concepts provided in the box. Use a concept only once.

Formulation	**Texture**	**Prototypes**	**Constraints**
Renovation	**Aesthetics**	**Management**	

1. The appearance of an item or product is known as _____.

2. _____ are things which may limit the making of a project.

3. Creation of a design brief from research and investigations is called

   _____.

4. To repair and renew any artifacts as good as new is called _____.

5. _____ refers to the surface quality of an object.

Skill level 1	1.	2.	3.	4.	5.
1					
0					
NR					

SHORT AND LONG ANSWERS:

Read the questions carefully and answer them correctly.

1. You have achieved the best outcome of your major project implementation. Describe the successful tasks that led you to achievement.

Skill level 2	
2	
1	
0	
NR	

2. Explain the role of **Emphasis** in the creativity of any designing purposes.

Skill level 3	
3	
2	
1	
0	
NR	

3. *"All designers in the world are not perfect at all. Usually, they use the strategy of re-design for quality designing outcomes.*"
Explain the importance of consulting the previous stage of the design process.

Skill level 3	
3	
2	
1	
0	
NR	

Study either **Picture A** or **Picture B** and choose **ONE (1)** picture to answer question 4.

PICTURE A

Source: Polynesian Culture

PICTURE B

Source: Island Birthday Cake

Chosen Picture: _____ (A or **B)**

4. Evaluate your chosen picture in terms of quality workmanship including skills and techniques. Use the design elements and principles.

_____

_____

_____

_____

_____

_____

_____

_____

_____

_____

_____

_____

_____

_____

_____

_____

_____

_____

_____

Skill level 4	
4	
3	
2	
1	
0	
NR	

SECTION B: TEXTILE TECHNOLOGY

MULTIPLE CHOICE:

Circle the letter of the **BEST** answer.

1. Identify the factor that would influence families to recycle their clothes.
   A. Financial status.
   B. Fashion demands.
   C. Cultural demands.
   D. Change of culture.

Skill level 1	
1	
0	
NR	

2. The neatening technique illustrated in **Figure 1** is called _____.
   A. Layering.
   B. Clipping.
   C. Notching.
   D. Trimming.

Figure 1

Source: blogspot.com

Skill level 1	
1	
0	
NR	

3. The following weave patterns to produce the strongest fabric is
   A. Twill weave.
   B. Plain Weave.
   C. Satin Weave.
   D. Basket Weave.

Skill level 1	
1	
0	
NR	

4. Identify the type of sleeve that illustrated in **Figure 2**.
   A. Puff.
   B. Raglan.
   C. Kimono.
   D. Leg of mutton.

Figure 2

Source: ikatbag.com

Skill level 1	
1	
0	
NR	

5. The creative leather belt worn to compliment a dress is
   A. a fad.
   B. a notion.
   C. an accessory.
   D. a fabric finishes.

Skill level 1	
1	
0	
NR	

PRINCIPLES OF STRUCTURAL AND DECORATIVE DESIGN:

SHORT AND LONG ANSWERS:

Read the questions carefully and answer them correctly.

1. Describe the following properties of fabrics correctly.

   i. Durability:

   _____

   _____

   _____

Skill level 2	
2	
1	
0	
NR	

   ii. Shrinkage:

   _____

   _____

   _____

Skill level 2	
2	
1	
0	
NR	

2. Explain why **Nylon** is unsuitable for children's sleep-wear garments.

Figure 3

Source: idealbaby.com

_____

_____

_____

_____

_____

_____

_____

_____

_____

_____

_____

_____

Skill level 3	
3	
2	
1	
0	
NR	

3. Explain why **Polyester** is often used in the manufacture of business shirts, as seen in **Figure 4**.

Figure 4

Source: Polyester custom shirt

Skill level 3	
3	
2	
1	
0	
NR	

4. This is an **Old-Fashioned Ball Gown** shown in **Figure 4**. Evaluate the ball gown considering the following requirements.

- *Elements and principles of design.*
- *Compare with the latest fashion.*
- *Combinations of materials.*

Figure 4

Source: veaul.com

Skill level 4	
4	
3	
2	
1	
0	
NR	

SELECTION OF FABRIC AND CONSTRUCTION TECHNIQUES:

SHORT AND LONG ANSWERS:

Read the questions carefully and answer them correctly.

1. Laundry agents help get your clothes clean. Each different type is used for a different purpose. Describe the purpose of the following laundry agents.

	Laundry agent	Purpose
i.		
ii.		

Skill level 2	
2	
1	
0	
NR	

Skill level 2	
2	
1	
0	
NR	

2. Study the pictures illustrated below and answer the question that follow. Choose either **Picture 1** or **Picture 2**.

Picture 1 **Doctors' surgical attire**	**Picture 2** **Flight crews' uniforms**
 Source: pinterest.com	 *Source: weariwandered.com*

Chosen Picture: _____ (1 or **2)**

Explain the uniform with regards to the following textile requirements that determine their **end uses** by filling in the table provided below.

Requirements	**Responses**	
i. Functional		**Skill level 3** 3 2 1 0 NR
ii. Social		**Skill level 3** 3 2 1 0 NR

3. Explain the methods by which a **Kick Pleat Figure 5** can be prevented from pulling open.

Figure 5

Source: accordion kick pleat

Skill level 3	
3	
2	
1	
0	
NR	

4. *Your 90 year old grandmother got 2 'puletaha's' for her birthday. She asked you as a designer to select which one is the best for her significant celebration day.*

Evaluate both puletaha's with recommendations on which is to be worn and will highlight your grandmother on her birthday.
[<u>Evaluation aspects:</u> age, design, occasion, material, quality of making, and suitability]

Puletaha #1	**Puletaha #2**
Source: Button traditional	***Source: islandstyle***

Skill level 4	
4	
3	
2	
1	
0	
NR	

SEWING MACHINE:

SHORT AND LONG ANSWERS:

Read the questions carefully and answer them correctly.

1. Identify the function of the **Balance wheel** in sewing.

_____

_____

_____

_____

Skill level 1	
1	
0	
NR	

2. Describe the *Remedies* for **Skipped Stitches** when tailoring.

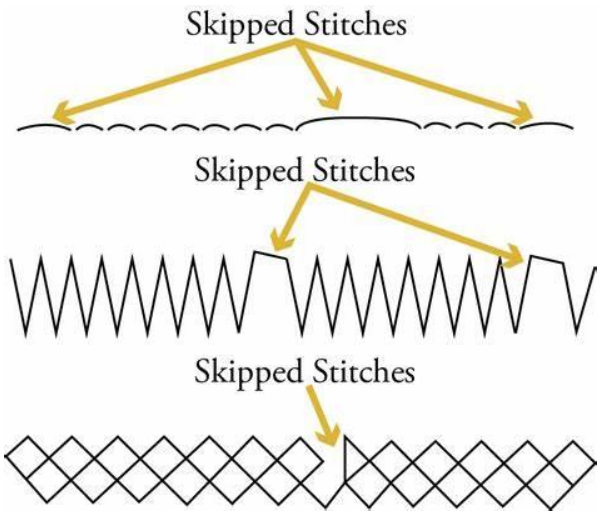

Source: stitchhandsew.net

_____

_____

_____

_____

_____

_____

_____

Skill level 2	
2	
1	
0	
NR	

3. Differentiate between **'Pressing'** and **'Ironing'** during Practical Sewing.

IRONING	**PRESSING**
	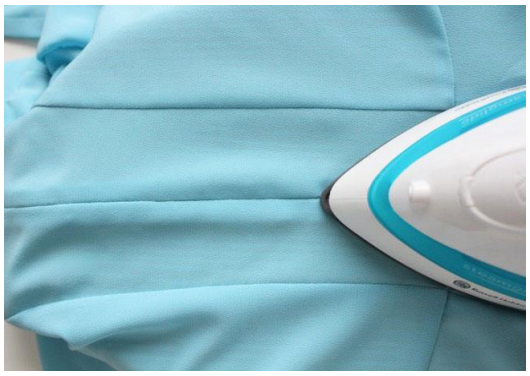
Source: dreamstime.com	***Source: tillyandthebuttons.com***

Skill level 3	
3	
2	
1	
0	
NR	

4. Analyze the benefits of the Portable Mini Sewing Machine to all local tailors in this modern times of sewing development.

Portable Mini Sewing Machine

Skill level 3	
3	
2	
1	
0	
NR	

5. Explain the importance of safely checking the Sewing Machine in the Laboratory for any Frayed Wiring before proceeding on the daily routine.

Frayed Wiring Sewing Machine

Source: autoTRADERca

Skill level 3	
3	
2	
1	
0	
NR	

MAJOR AREA 5: TECHNICAL GRAPHICS

SECTION A:

MULTIPLE CHOICE:

Circle the letter of the **BEST** answer.

1. Which of the following is an example of a balance force?
   A. An accelerating car
   B. A book resting on a table
   C. Pushing a block of mass
   D. Launching a rocket

Skill level 1	
1	
0	
NR	

2. Name the type of pictorial drawing given:
   A. Isometric
   B. Oblique
   C. Orthographic
   D. Perspective

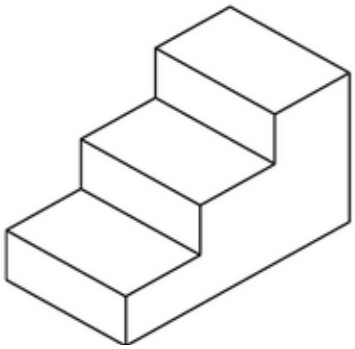

Skill level 1	
1	
0	
NR	

3. What are the heights of the letters for Drawing title?
   A. 6,8 mm
   B. 3,4,5, or 6 mm
   C. 8,10, or 12 mm
   D. 12 mm

Skill level 1	
1	
0	
NR	

4. What is the total length of the pictorial isometric diagram given:
   A. 10 mm
   B. 15 mm
   C. 35 mm
   D. 55 mm

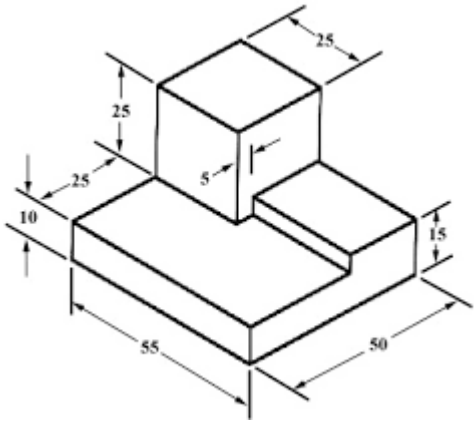

Skill level 1	
1	
0	
NR	

5. What is this symbol which is indicated on a drawing:
   A. radius
   B. volume
   C. diameter
   D. length

Skill level 1	
1	
0	
NR	

6. Which type of line indicate Projection lines:

A.

B.

C.

D.

Skill level 1	
1	
0	
NR	

7. Which stage of the design process is most important?
   A. Evaluating and document
   B. Identifying possible solution
   C. Research and investigating
   D. Testing and troubleshooting

Skill level 1	
1	
0	
NR	

8. When the line of intersection formed by two solids is a curve then the solids are:
   A. Cube, prism
   B. Cone, cylinder
   C. Pyramid, cube
   D. Pyramid, cuboid

Skill level 1	
1	
0	
NR	

9. Which type of line is shown by **A** in the diagram?
   A. Outline
   B. Section line
   C. Hidden line
   D. Centerline

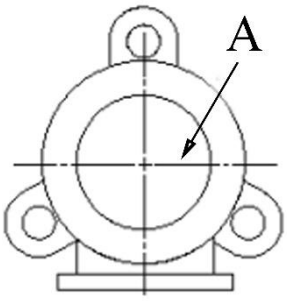

Skill level 1	
1	
0	
NR	

10. Which of the following is an obtuse triangle?

A. 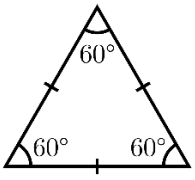

B. 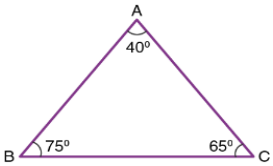

C. 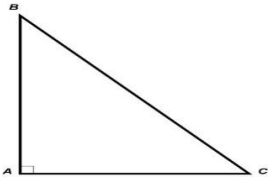

D. 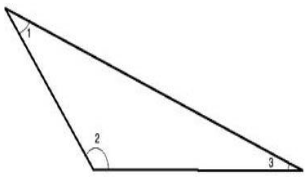

Skill level 1	
1	
0	
NR	

SHORT AND LONG ANSWERS:

Read the questions carefully and answer them correctly.

1. Draw a chain line.

Skill level 1	
1	
0	
NR	

2. What is the total height of the cutter holder given.

_____

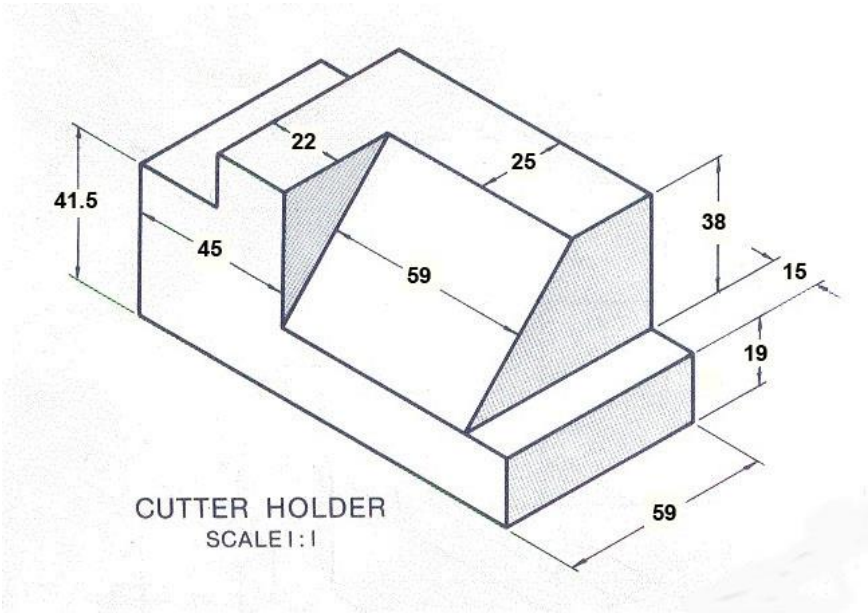

Skill level 1	
1	
0	
NR	

3. What projection does this drawing symbol show.

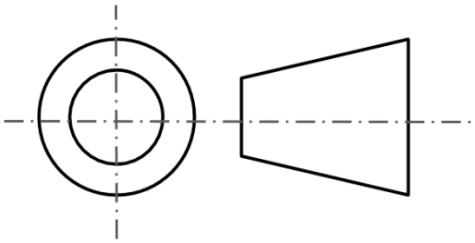

_____

Skill level 1	
1	
0	
NR	

4. Complete the table by describing what type of load they are.

Wind loads	
Dead loads	

Skill level 2	
2	
1	
0	
NR	

5. Use compasses and a ruler to construct a 30 degrees angle from point **A**.

Skill level 2	
2	
1	
0	
NR	

6. Name the type of line indicated by letter **C.** and **G.**

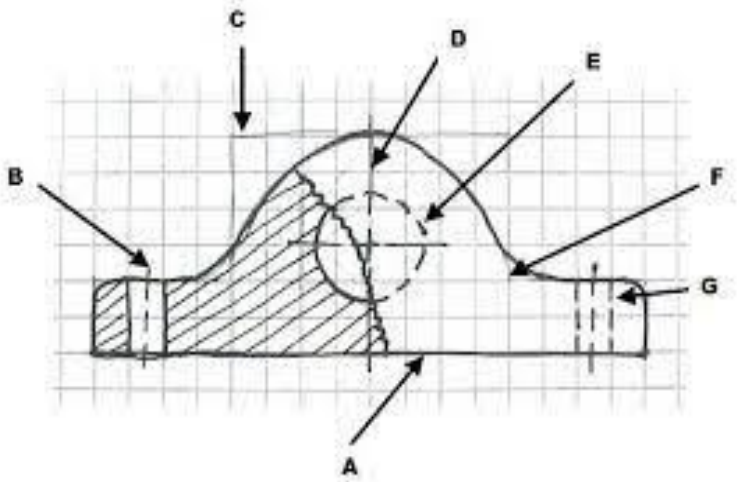

Skill level 2	
2	
1	
0	
NR	

7. A pentagonal pyramid of base 30mm and height 60mm rests with one of its base edges on HP. The axis of the pyramid makes an angle of 450 with HP. Draw its projections.

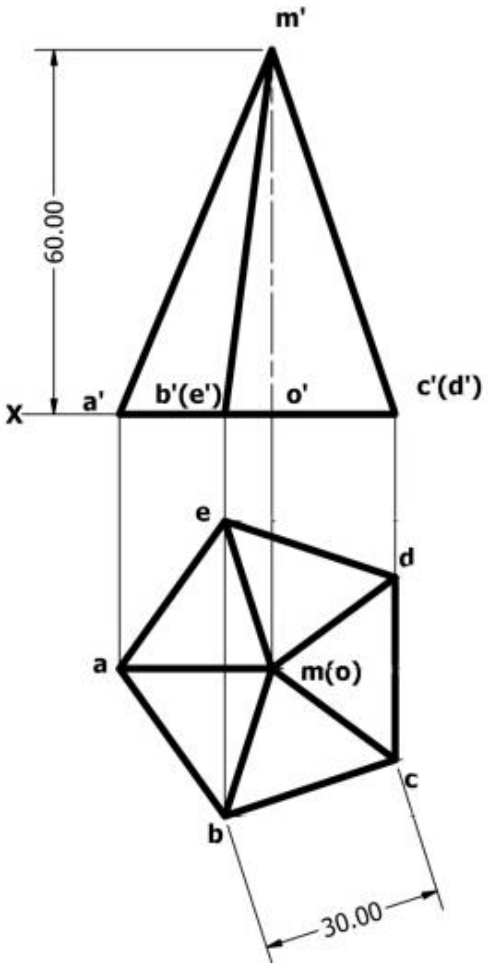

Skill level 3	
3	
2	
1	
0	
NR	

8. A cylinder 50mm diameter and 70mm axis is completely penetrated by another of 40mm diameter and 70mm horizontally. Both axes intersect and bisect each other. Draw projections showing curves of the intersections.

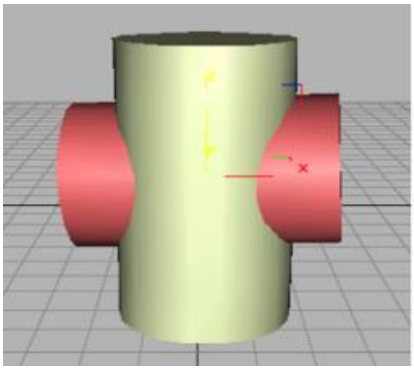

Skill level 3	
3	
2	
1	
0	
NR	

9. Complete the orthographic projections of the Isometric drawing given. Measurements are in millimeters.

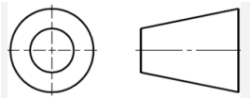

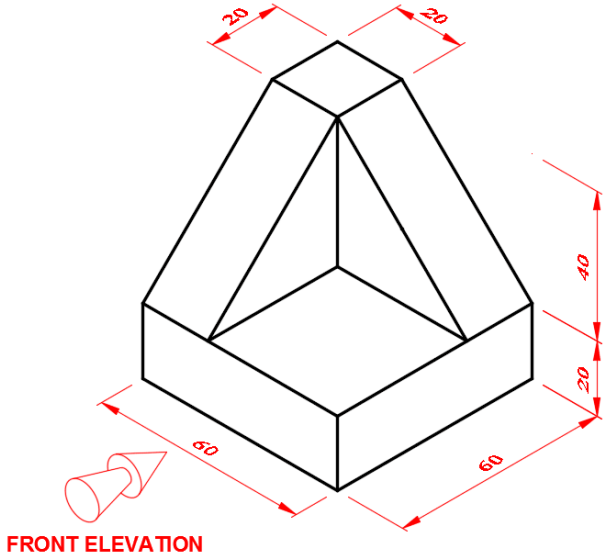

Skill level 3	
3	
2	
1	
0	
NR	

10. Construct a regular hexagon with a side 40mm.

Skill level 3	
3	
2	
1	
0	
NR	

11. A regular pentagon has one side on the ground. Its plane is inclined at 45º to the HP and perpendicular to the VP. Draw its projections and show its traces

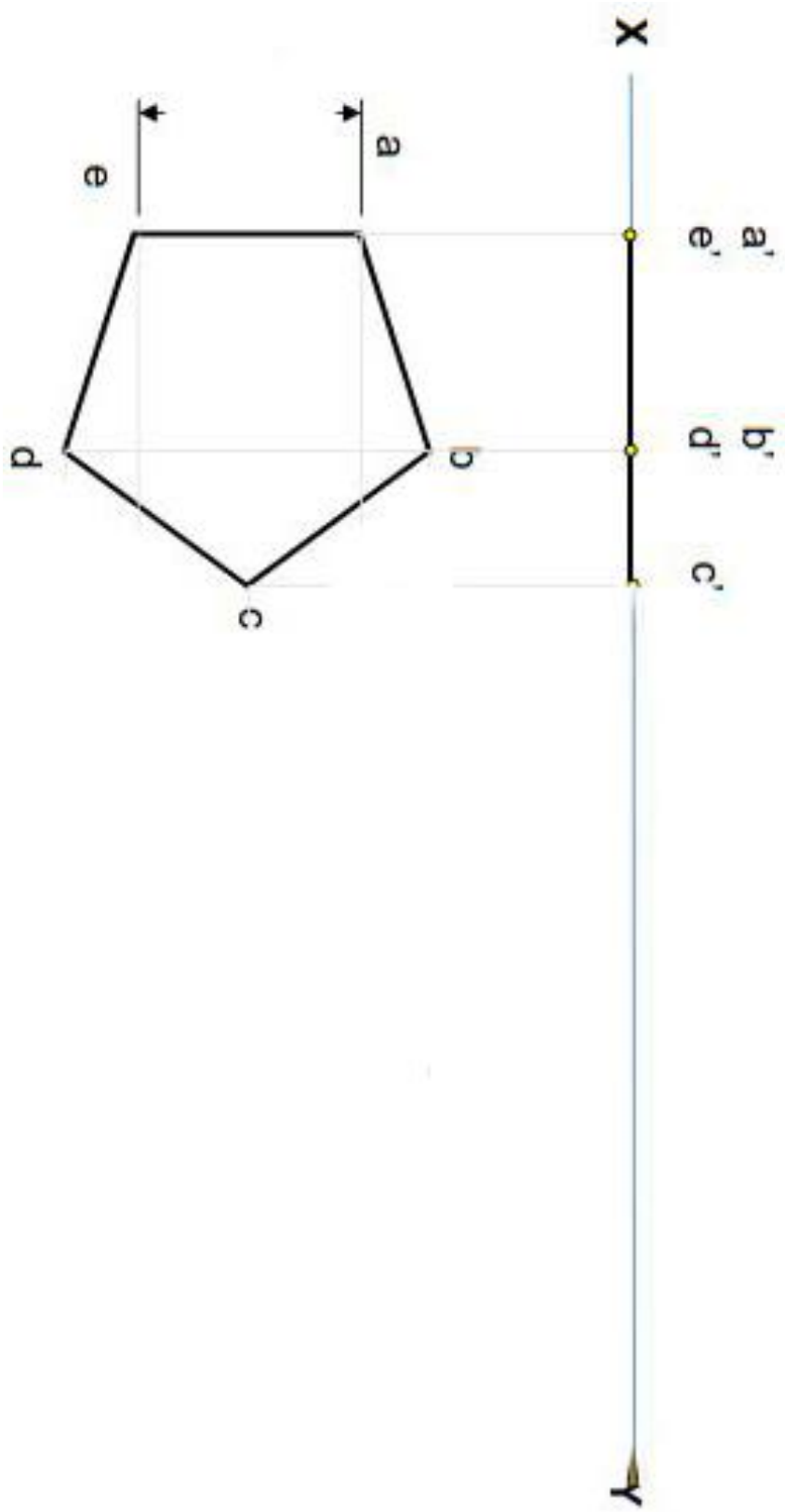

Skill level 3	
3	
2	
1	
0	
NR	

12. A line PQ of length 40mm is parallel to the HP and inclined at an angle of 35° to the VP. The end P is 20mm above the HP and 15mm in front of the VP. Draw its projections.

Skill level 4	
4	
3	
2	
1	
0	
NR	

SECTION B: DESIGNING

1. Define the following terms.

i. Design brief:

_____

_____

Skill level 1	
1	
0	
NR	

ii. Investigating:

_____

_____

Skill level 1	
1	
0	
NR	

2. Complete the table by naming the missing design stages.

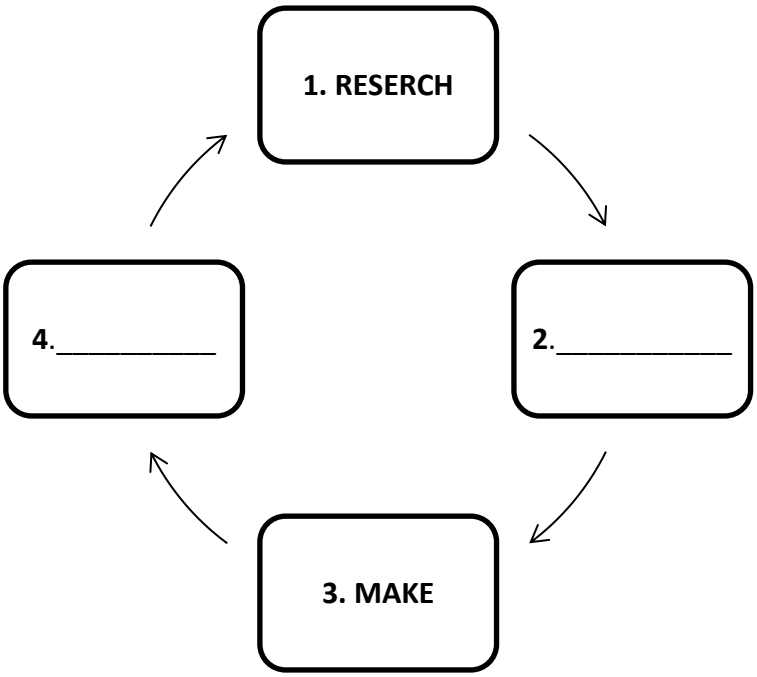

Skill level 1	
1	
0	
NR	

3. List **TWO** (2) importance of the evaluation stage of a design brief.

_____

_____

_____

_____

_____

_____

_____

Skill level 2	
2	
1	
0	
NR	

4. List **TWO** (2) of the methods you used for the investigation of your independent project this year.

Skill level 2	
2	
1	
0	
NR	

5. What does "two ways process" mean in designing process?

Skill level 2	
2	
1	
0	
NR	

6. Explain how you carried out your investigation for your independent project this year.

Skill level 3	
3	
2	
1	
0	
NR	

7. Explain how you came up with your best solution during the designing stage of your project.

Skill level 3	
3	
2	
1	
0	
NR	

8. Explain how you managed to overcome any problems that occurred during the making stage of your project.

Skill level 3	
3	
2	
1	
0	
NR	

9. Explain the outcome of your project that you used in your Internal Assessment (IA) this year. Think about the outcome, did it meet the design brief? How well did it work? Could it be improved?

Skill level 3	
3	
2	
1	
0	
NR	

10. Explain the importance of consulting the previous stage of the design process while constructing your project.

Skill level 3	
3	
2	
1	
0	
NR	

11. Draw to scale 1:1 the front view, top view and side view of the given machine block.

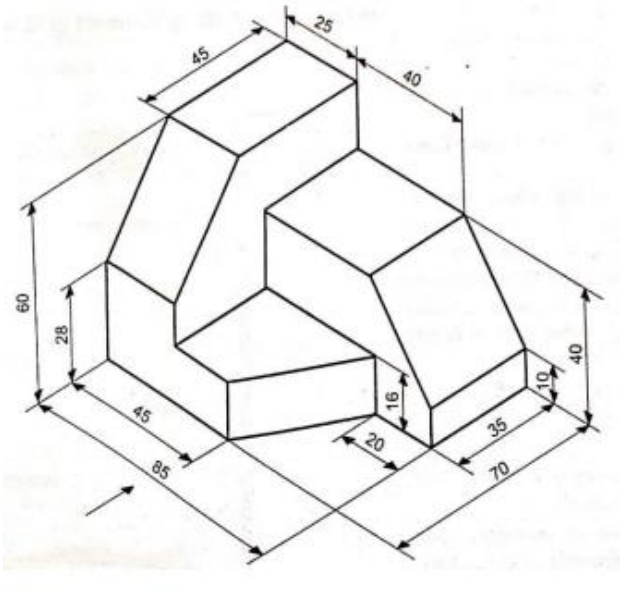

Skill level 4	
4	
3	
2	
1	
0	
NR	

12. Find the image of ΔPQR under the enlargement with center of enlargement O and scale factor is -½.

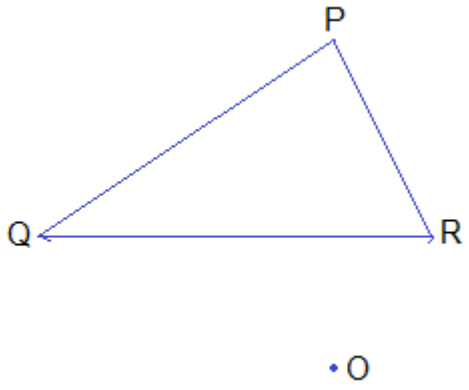

Skill level 4	
4	
3	
2	
1	
0	
NR	

THIS PAGE HAS BEEN DELIBERATELY LEFT BLANK.

THIS PAGE HAS BEEN DELIBERATELY LEFT BLANK.